GM300S6G2 SHOWN

COMMERCIAL-IN-CONFIDENCE

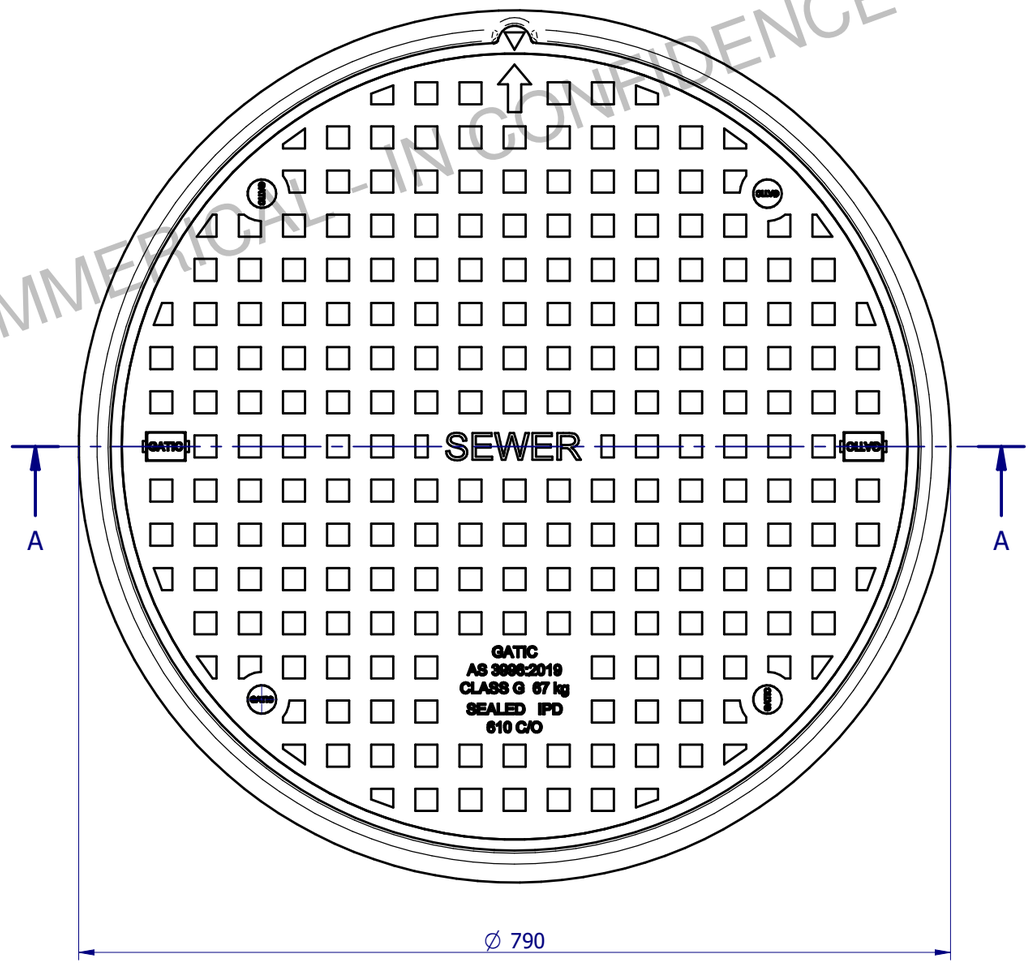

CODE	INSCRIPTION	
GM300S6G	N/A, blank	
GM300S6G2	SEWER	SEWER
GM300S6G3	STORMWATER	STORMWATER
GM300S6G5	ELECTRICAL	ELECTRICAL

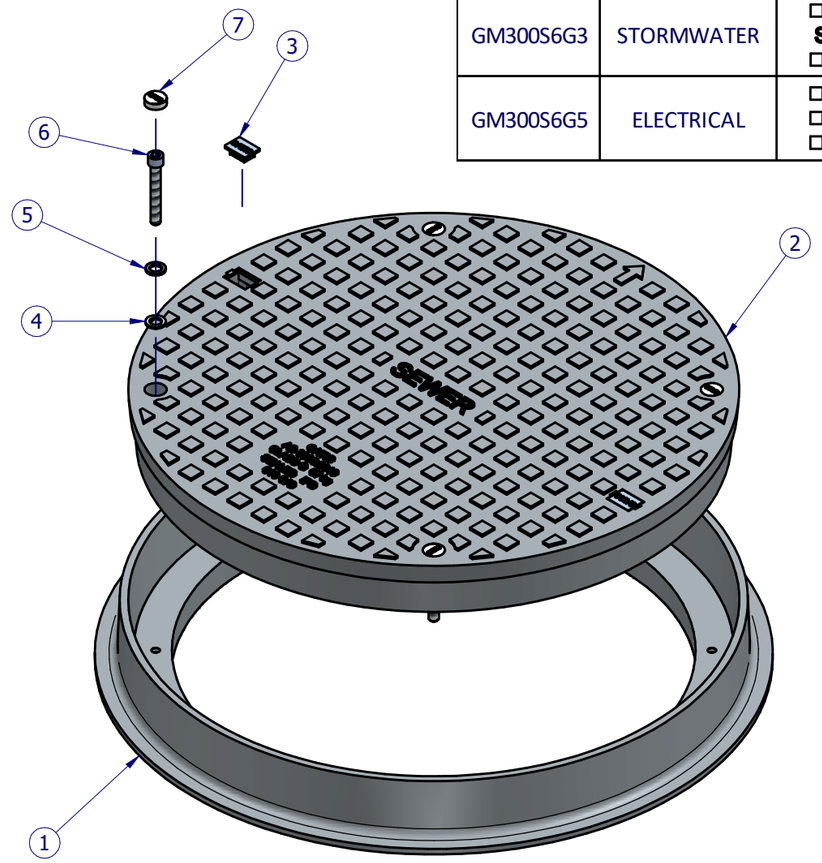

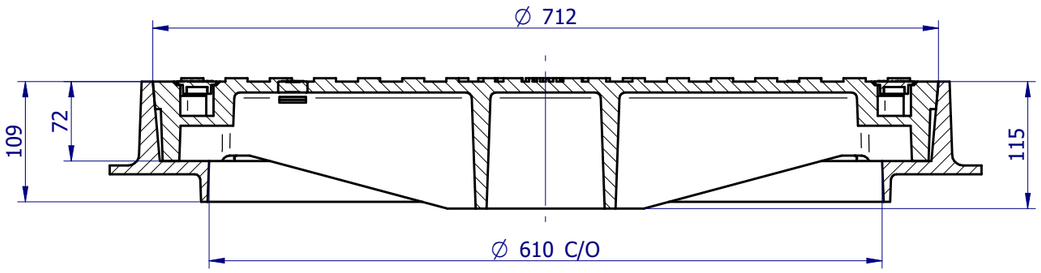

SECTION A-A

Item No.	Drwg No.	Rev	Title	Material	Qty	Mass
1	4203	C	Ø610 C/O Frame Class G 900 kN	Ductile Iron 500-10	1	35.4 kg
2	4202	D	Ø610 C/O Solidtop Cover Class G 900 kN	Ductile Iron 500-10	1	66.6 kg
3	1681	A	Plastic Keyhole Plug	UV Stabilized Nylon	2	0.0 kg
4	2917	A	M12 Washer	Nylon, general purpose	4	0.0 kg
5	2918	A	M12 Washer	Stainless Steel, A4-70	4	0.0 kg
6	5995	A	M12x85 Socket Head Cap Bolt	Stainless Steel, A4-70	4	0.4 kg
7	2854	C	Plastic Plug Ø26 mm	UV Stabilized Nylon	4	0.0 kg

REVISION No	DATE	DESCRIPTION	BY	CKD.
D	01-12-22	COVER & FRAME DRAWING REVISED.	F.M.	F.M.
C	22-06-20	COVER DRAWING REVISED.	F.M.	S.S.
B	02-05-14	FRAME AND COVER REVISED.	S.S.	S.S.
A	12-10-11	INITIAL RELEASE.	F.M.	S.S.

UNLESS OTHERWISE STATED
ALL MEASURES IN MILIMETERS.
GENERAL CAST TOLERANCES:
CT9 to ISO 8062.
CASTING RADII: 3 mm
DRAFT TAPERS: 2°

LINEAR MACHINING TOLERANCE:
X. ±0.25 mm
X.X ±0.10 mm

ANGULAR MACHINING TOLERANCE:
X. ±0.5°
X.X ±0.1°

NOM = Nominal; O/A = Overall; TYP = Typical; C/O = Clear Opening

FINISH: ALL CAST SURFACES TO BE PAINTED BLACK.
FABRICATED COMPONENTS TO BE HOT DIP GALVANISED TO AS4680.
RUST PROOF SEALANT TO BE APPLIED ON ALL MACHINED SURFACES.

GATIC PTY LTD
9-15 Radford Road, PO Box 312, Reservoir VIC. 3073
Ph- 03 9316 2666 Fax- 03 9315 0099 www.gatic.com.au

THIRD ANGLE PROJECTION

	BY	DATE
DESIGNED:	S.S.	12-10-11
DRAWN:	F.M.	12-10-11
CHECKED:	S.S.	12-10-11
APPROVED:	H.B.	12-10-11

CODE: REFER TABLE
SCALE: N.T.S.
FORMAT: A3
SHEET: 1 of 1

TITLE: Ø610 C/O SOLID TOP COVER AND FRAME ASSEMBLY CLASS G 900 kN
MATERIAL: --
MASS: 102.4 kg
DRG. No: 4204
REV: D

© Copyright : Gatic Pty Ltd - 2022