COMMERCIAL IN CONFIDENCE

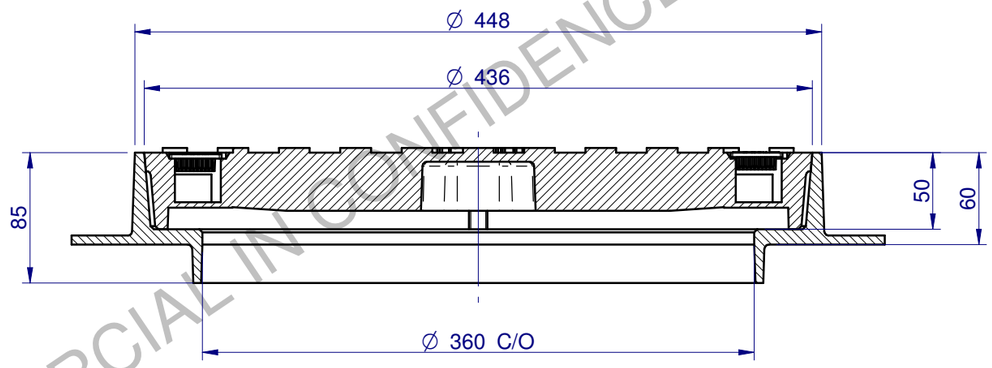

SECTION A-A

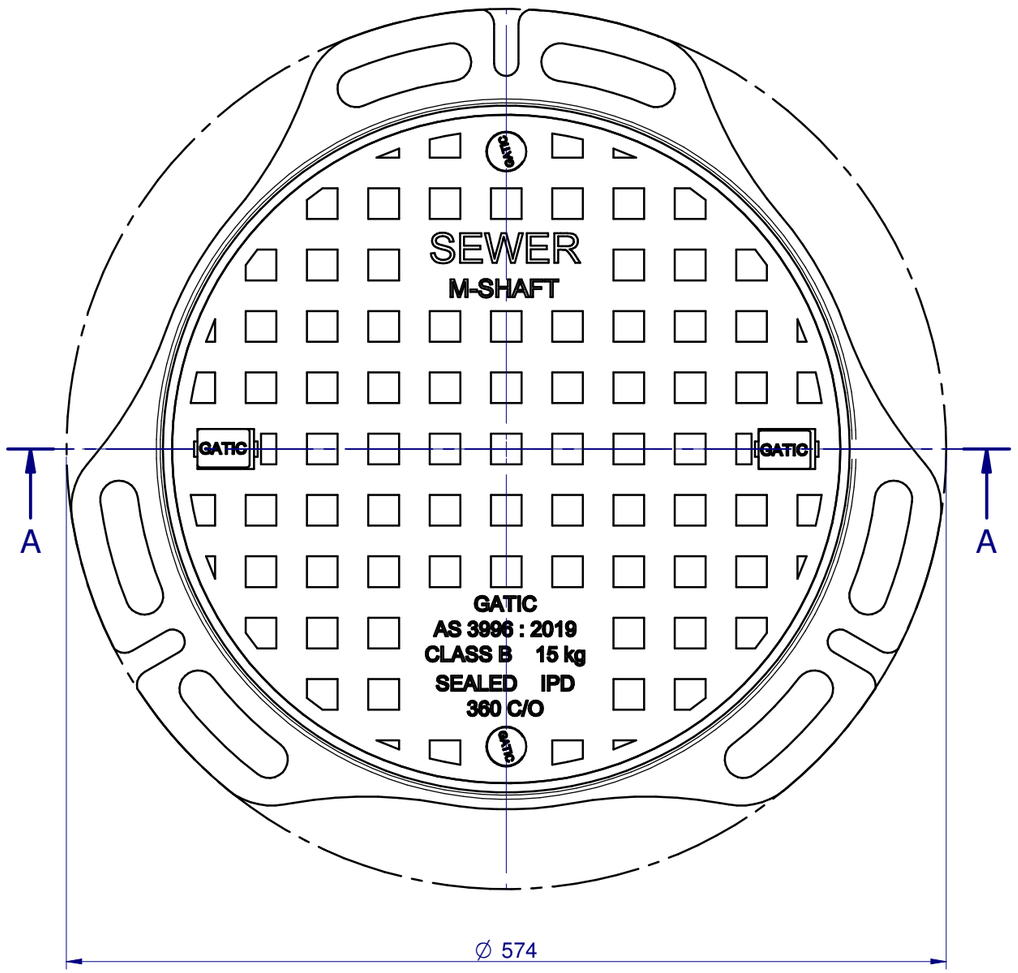

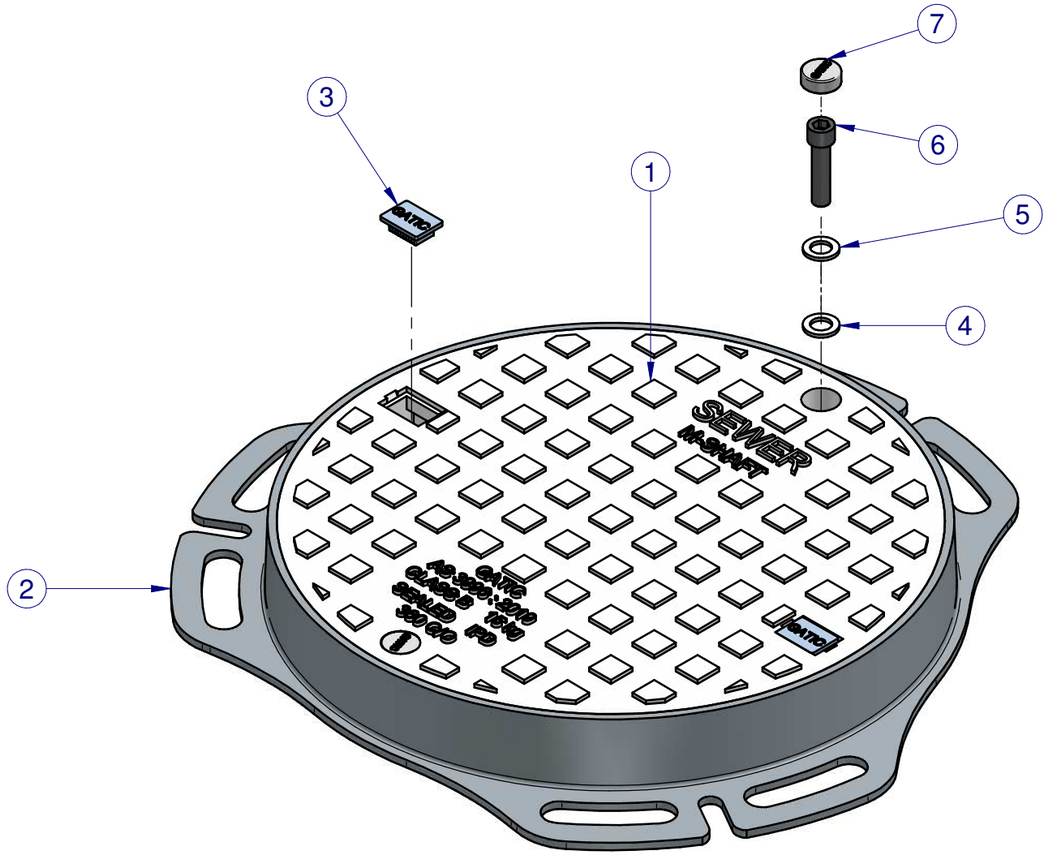

GM300S36B2						
Item No.	Drwg No.	Revision	Description	Material	Qty	Mass
1	1970	D	Ø360 C/O Solid Top Cover Class B AS3996	Ductile Iron 500-10	1	14.5 kg
2	1969	C	Ø360x50 C/O DI Frame	Ductile Iron 500-10	1	11.9 kg
3	1681	A	Plastic Keyhole Plug	UV Stabilized Nylon	2	0.0 kg
4	2917	A	M12 Washer	Nylon, general purpose	2	0.0 kg
5	2918	A	M12 Washer	Stainless Steel, A4-70	2	0.0 kg
6	5990	A	M12 x 50 Socket Head Cap Bolt	Stainless Steel, A4-70	2	0.1 kg
7	2854	C	Plastic Plug Ø26 mm	UV Stabilized Nylon	2	0.0 kg

COMMERCIAL IN CONFIDENCE

REVISION				
No	DATE	DESCRIPTION	BY	CKD.
C	10-08-20	COVER AND FRAME REVISED	F.M.	S.S.
B	08-11-17	REVISED WITH NO CHANGES	F.M.	S.S.
A	15-05-13	INITIAL RELEASE	F.M.	S.S.

UNLESS OTHERWISE STATED
ALL MEASURES IN MILIMETERS.
GENERAL CAST TOLERANCES:
CT9 to ISO 8062.
CASTING RADII: 3 mm
DRAFT TAPERS: 2°

LINEAR MACHINING TOLERANCE:
X. ±0.25 mm
X.X ±0.10 mm

ANGULAR MACHINING TOLERANCE:
X. ±0.5°
X.X ±0.1°

NOM = Nominal; O/A = Overall; TYP = Typical; C/O = Clear Opening

FINISH: ALL CAST SURFACES TO BE PAINTED AS SPECIFIED. FABRICATED COMPONENTS TO BE HOT DIP GALVANISED TO AS4680. LIGHT FILM OF GATIC SEALING GREASE TO BE APPLIED ON ALL MACHINED SURFACES.

GATIC PTY LTD
9-15 Radford Road, PO Box 312, Reservoir VIC. 3073
Ph- 03 9316 2666 Fax- 03 9315 0099 www.gatic.com.au

THIRD ANGLE PROJECTION

	BY	DATE
DESIGNED:	--	--
DRAWN:	F.M.	15-05-13
CHECKED:	S.S.	15-05-13
APPROVED:	H.B.	15-05-13

CODE: GM300S36B2
SCALE: N.T.S.
FORMAT: A3
SHEET: 1 of 1

TITLE: 360 C/O M-SHAFT COVER & FRAME ASSEMBLY CLASS B
MATERIAL: --
MASS: 26.5 kg
DRG. No: 4838
REV: C

© Copyright : Gatic Pty Ltd - 2020