COMMERCIAL IN CONFIDENCE

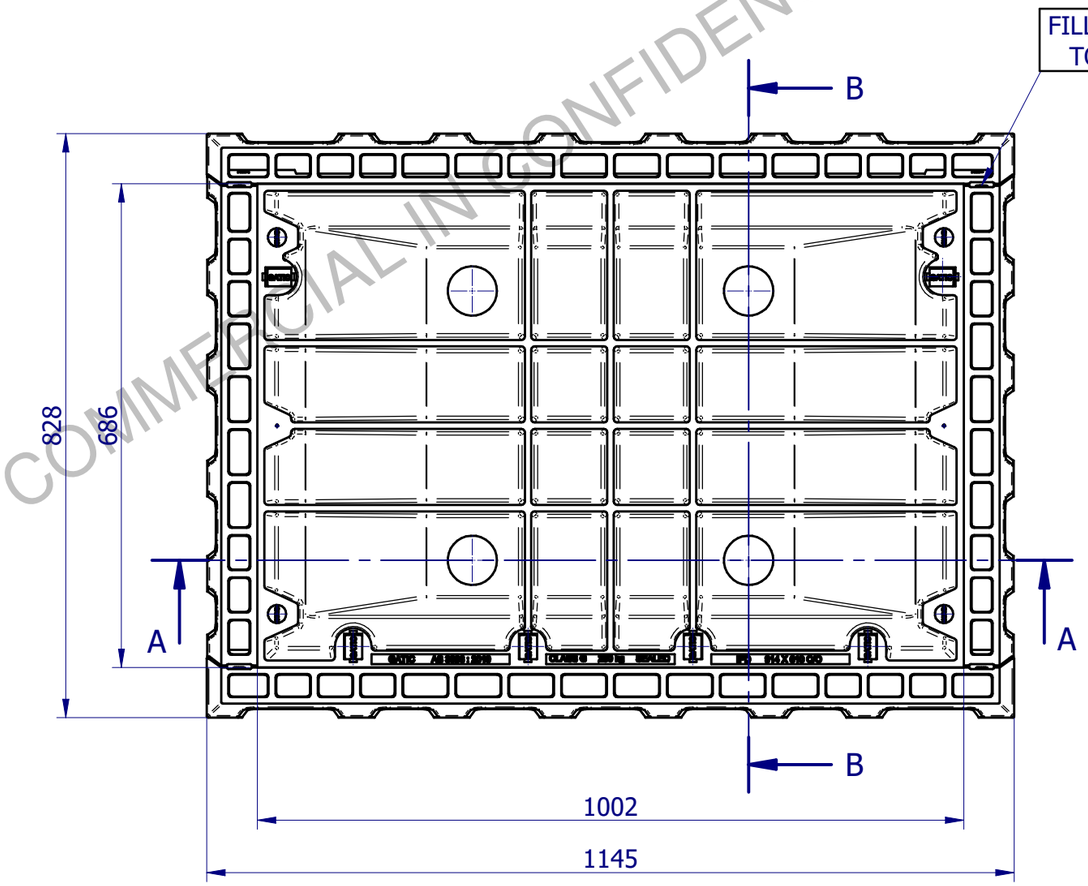

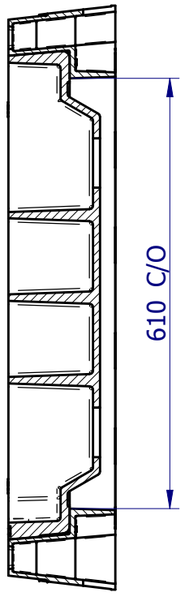

SECTION B-B

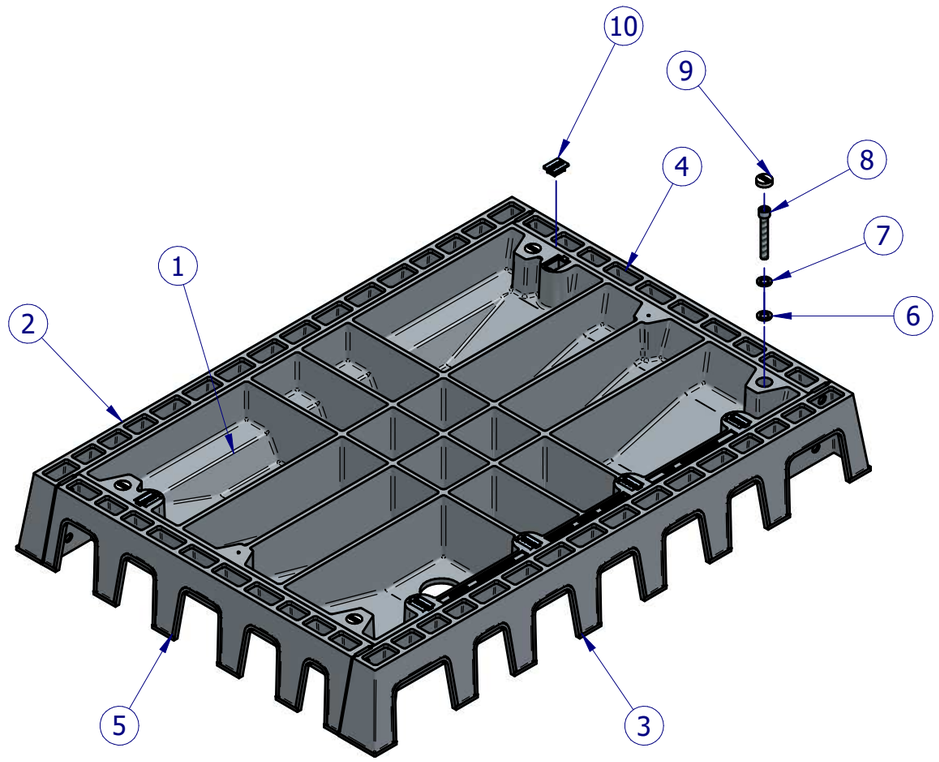

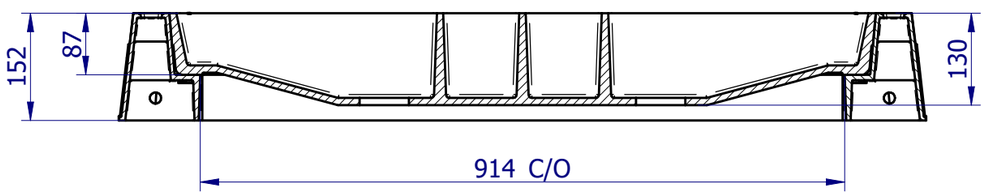

SECTION A-A

GM301C96G

Item No.	Document No.	Rev	Title	Material	Qty	Mass
1	1646	F	914x610 C/O Concrete Infill Cover Class G	Ductile Iron 500-10	1	136.7 kg
2	2821	C	914 mm UC Bar Class G	Ductile Iron 500-10	1	17.9 kg
3	2825	C	914 mm DC Bar Class G	Ductile Iron 500-10	1	18.1 kg
4	2831	C	610 mm RH Side Bar Class G	Ductile Iron 500-10	1	12.2 kg
5	2827	C	610 mm LH Side Bar Class G	Ductile Iron 500-10	1	12.2 kg
6	2917	A	M12 Washer	Nylon, general purpose	4	0.0 kg
7	2918	A	M12 Washer	Stainless Steel, A4-70	4	0.0 kg
8	5995	A	M12x85 Socket Head Cap Bolt	Stainless Steel, A4-70	4	0.4 kg
9	2854	A	Plastic Plug Ø26 mm	UV Stabilized Nylon	4	0.0 kg
10	1681	A	Plastic Keyhole Plug	UV Stabilized Nylon	6	0.0 kg

COMMERCIAL IN CONFIDENCE

REVISION

No	DATE	DESCRIPTION	BY	CKD.
E	20-08-20	MODIFIED TO COMPLY WITH AS 3996 : 2019	F.M.	S.S.
D	13-05-13	FRAMES MODIFIED	F.M.	S.S.
C	08-09-09	MARKINGS LAYOUT UPDATED ON COVER	F.M.	S.S.

UNLESS OTHERWISE STATED
ALL MEASURES IN MILIMETERS.
GENERAL CAST TOLERANCES:
CT9 to ISO 8062.
CASTING RADII: 3 mm
DRAFT TAPERS: 2°

LINEAR MACHINING TOLERANCE:
X. ±0.25 mm
X.X ±0.10 mm

ANGULAR MACHINING TOLERANCE:
X. ±0.5°
X.X ±0.1°

NOM = Nominal; O/A = Overall; TYP = Typical; C/O = Clear Opening

FINISH: ALL CAST SURFACES TO BE PAINTED AS SPECIFIED. FABRICATED COMPONENTS TO BE HOT DIP GALVANISED TO AS4680. LIGHT FILM OF GATIC SEALING GREASE TO BE APPLIED ON ALL MACHINED SURFACES.

GATIC PTY LTD
9-15 Radford Road, PO Box 312, Reservoir VIC. 3073
Ph- 03 9316 2666 Fax- 03 9315 0099 www.gatic.com.au

THIRD ANGLE PROJECTION

	BY	DATE
DESIGNED:	S.S.	14-10-08
DRAWN:	H.L.	06-02-09
CHECKED:	S.S.	06-02-09
APPROVED:	H.B.	06-02-09

CODE: GM301C96G
SCALE: N.T.S.
FORMAT: A3
SHEET: 1 of 1

TITLE: 914 x 610 C/O CONCRETE INFILL COVER & FRAME ASSY CLASS G
MATERIAL: --
MASS: 197.6 kg
DRG. No: 2869
REV: E

© Copyright : Gatic Pty Ltd - 2020